Material:

* Insulation:
  High temperature plastic UL 94V-0
* Contact: Phosphor Bronze
* Pick & Place Pad:
  Nylon 6T UL 94V-0 Color Nature

DIM.A= 1.27 x No. of Spaces
DIM.B= DIM.A + 3.3

ORDERING CODE:

CA30 ** M 1 3 * *
① ② ③ ④ ⑤ ⑥

① Series NO.:
② NO. OF CIRCUITS: 04 TO 26
③ Contacts TYPE: M= SMT
④ Plating option:
1= Tin over Nickel(Matte)
⑤ Color: 3= Red
⑥ Packing options:
RO=With PAD Tape & Reel
RN=Without PAD Tape & Reel
TO=Without PAD & Tube Packing

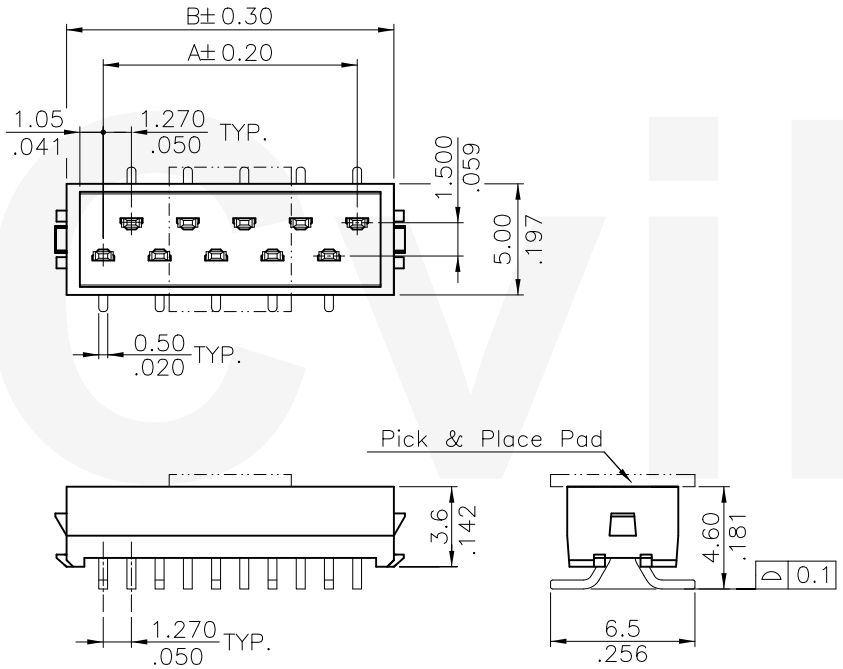

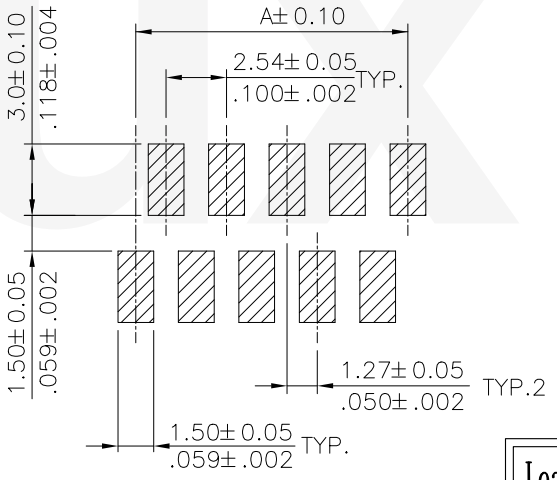

△3 Solder Pad Pattern

Lead Free Process

RoHS Compliant

SYM	NAME	DATE	REVISIONS
4	Ken	3/3-17'	ECNT117048
3	Sandy	3/16-12'	ECN12032-0
2	Eager	04/09-07'	ECN07259
1	Eager	04/09-07'	ECN07135

CVILUX CORP 2017.03.10 ISSUED

		DATE
DRAWN BY:	Ken	3/6-17'
ENGINEER:	Sun	3/7-17'
CHECKED BY:	Eisley	3/9-17'
APPROVED BY:	Eisley	3/9-17'

UNIT: mm / inch

TOLERANCE UNLESS OTHERWISE SPECIFIED

.X ± 0.30/.012	X° ± 1°
.XX ± 0.20/.008	.X° ±
.XXX ± 0.10/.004	.XX° ±

TITLE: CA30 SERIES SMT TYPE

MATERIAL:

FINISH:

瀚荃股份有限公司
CviLux Corporation

DRAWING NO.	CA3007SD	PART NO.	CA30**M13**
SCALE	4 / 1	SHEET	1 OF 2

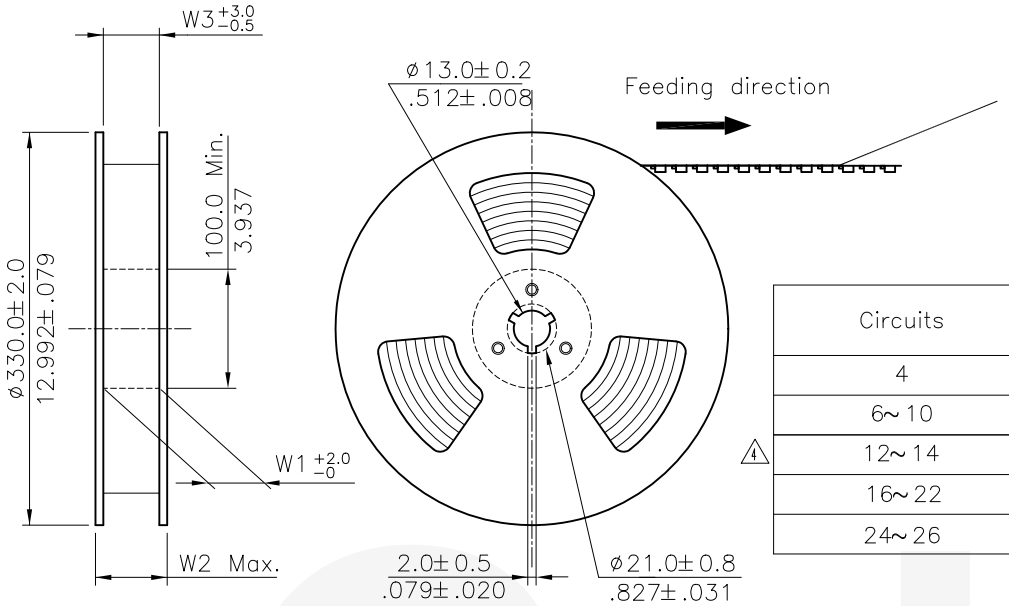

NOTES:

1. 10 sprocket hole pitch cumulative tolerance ±0.20mm.
2. Carrier camber not to exceed 1 mm in 100 mm.
3. Material :Transparent Anti−static Polysyrene.
4. All dimensions meet EIA−481−3 requirements.
5. Thickness : 0.40± 0.05mm.
6. Packing length per 22" Reel : 30.6 Meters.
7. Component load per 13" Reel :1000 pcs.

Circuits	Dimension					Packing (Reel/Caton)
	E	F	W1	W2	W3	
4	16.0(.630)	–	16.5(.650)	22.5(.886)	16.5(.650)	11
6~10	24.0(.945)	–	24.5(.965)	30.5(1.201)	24.5(.965)	9
12~14	32.0(1.260)	28.40(1.118)	32.5(1.280)	38.5(1.516)	32.5(1.280)	7
16~22	44.0(1.732)	40.40(1.596)	44.5(1.752)	50.5(1.988)	44.5(1.752)	5
24~26	56.0(2.205)	52.40(2.063)	56.5(2.224)	62.5(2.461)	56.5(2.224)	4

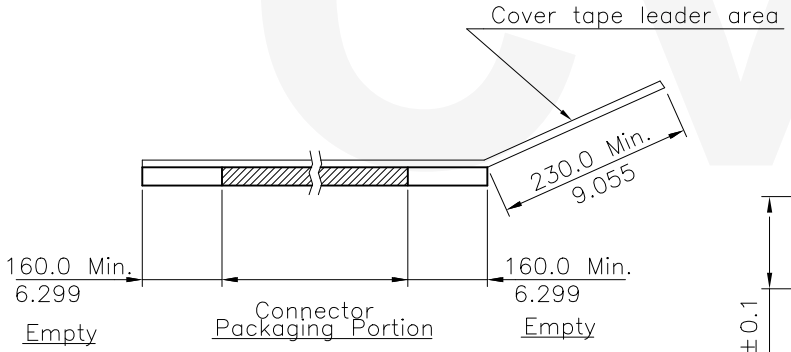

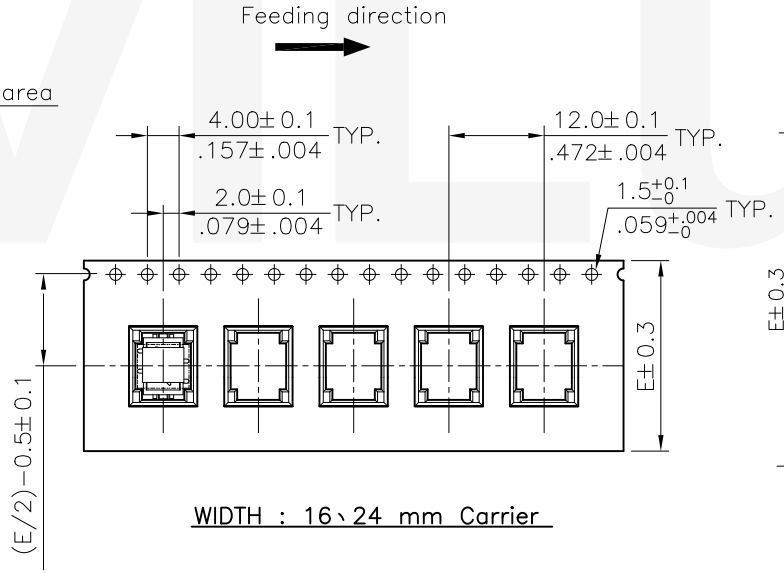

WIDTH : 16、24 mm Carrier

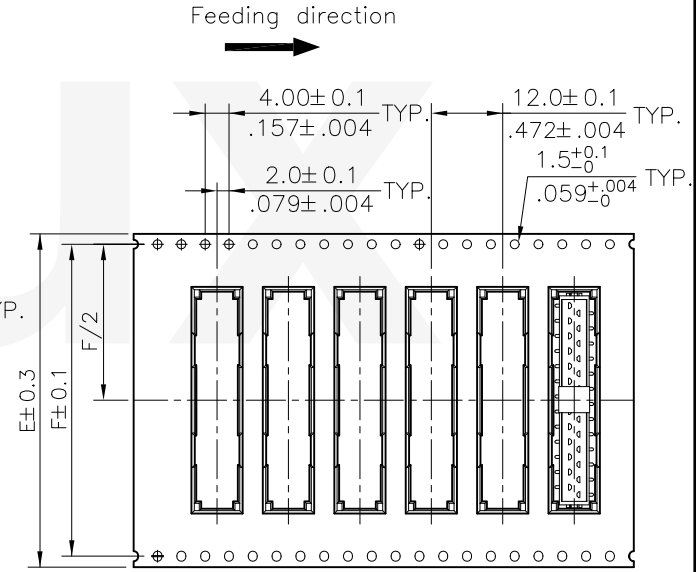

WIDTH : 32.44.56 mm Carrier

RoHS Compliant

SYM	NAME	DATE	REVISIONS
4	Ken	3/3-17'	ECNT117048
3	Sandy	3/16-12'	ECN12032-0
2	Eager	04/09-07'	ECN07259
1	Eager	04/09-07'	ECN07135

CVILUX CORP 2017.03.10 ISSUED

		DATE
DRAWN BY:	Ken	3/6-17'
ENGINEER:	Sun	3/7-17'
CHECKED BY:	Eisley	3/9-17'
APPROVED BY:	Eisley	3/9-17'

UNIT: mm / inch

TOLERANCE UNLESS OTHERWISE SPECIFIED

.X ±	X.° ± 1°
.XX ±	.X' ±
.XXX ±	.XX" ±

TITLE: TAPE & REEL PACKAGING FOR CA30 SERIES SMT TYPE

MATERIAL:

FINISH:

瀚荃股份有限公司
CviLux Corporation

DRAWING NO.	CA3007SD	PART NO.	CA30**M13**
SCALE		SHEET	2 OF 2