No.	DESCRIPTION	MATERIAL	FINISH	Q'TY
1	BODY	BRASS	GOLD PLATED	1
2	CONTACT	BRASS	GOLD PLATED	1
3	INSULATOR	TEFLON	–	1
4	INSULATOR	TEFLON	–	1

Specifications:

Electrical

- Impedance: 50Ω
- Frequency Range: 0–4 GHz
- Working Voltage: 335 VRMS Max.
- Dielectric Withsanding Voltage: 1000 VRMS Min.
- VSWR: 1.5 Max.
- Contact Resistance
  - Center contact: 6mΩ Max.
  - Ouer Contact: 2mΩ Max.
- Insulator Resistance: 1000MΩ Min.

Mechanical & Environmental

- Engagement/Disengagement Force: 14 lbs. Max.
- Contact Retention: 4 lbs. Min.
- Durability (Mating): 500 cycles Min.
- Temperature Range: −65°C to 165°C
- Vibration: MIL–STD–202 Method 204 Test Cond.B
- Salt Spray: MIL–STD–202 Method 101 Test Cond.B
- Thermal Shock: MIL–STD–202 Method 107 Test Cond.B

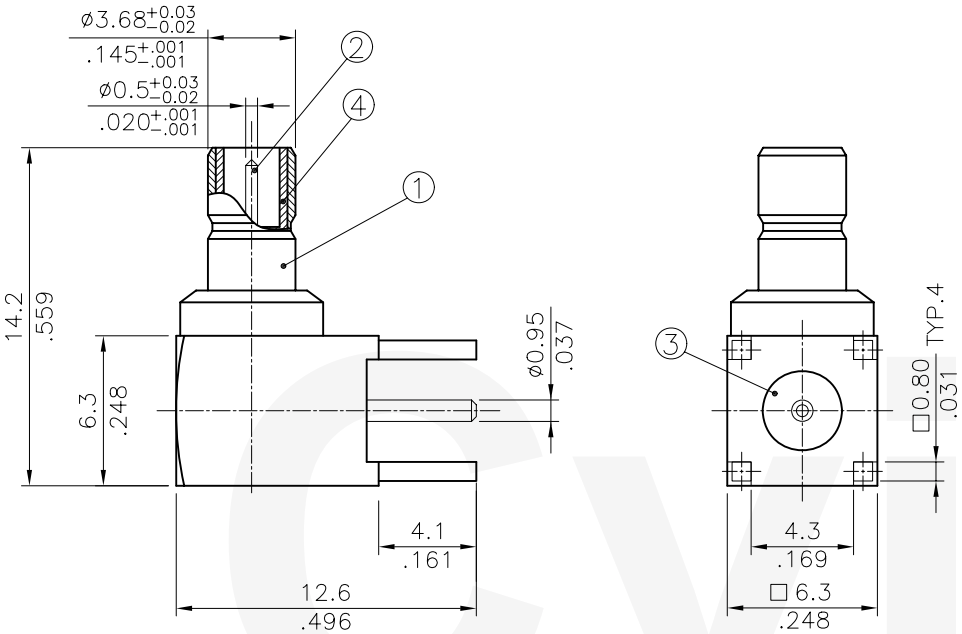

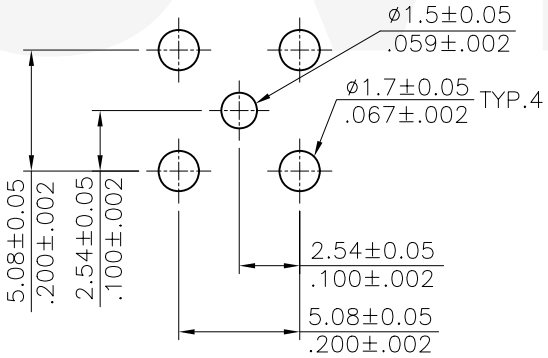

Recommended P.C. Board Layout

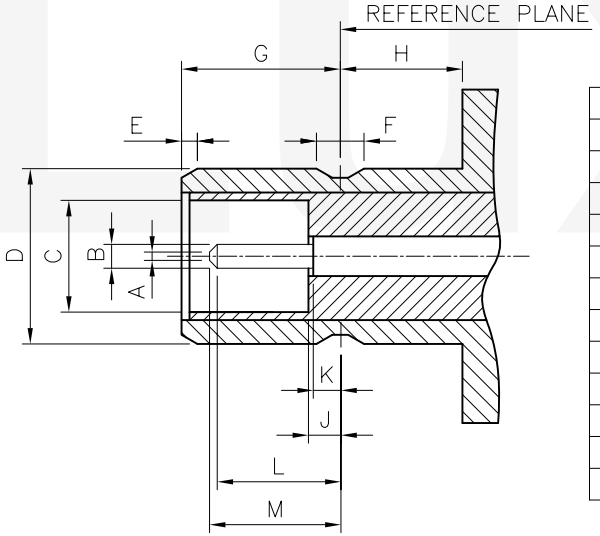

DIM.	Min.	Max.
A	–	0.25(.010)
B	0.48(.019)	0.53(.021)
C	2.08(.082)	2.16(.085)
D	3.66(.144)	3.71(.146)
E	0.00	–
F	0.69(.027)	0.94(.037)
G	3.33(.131)	3.58(.141)
H	2.03(.080)	–
J	–	0.18(.007)
K	–	0.18(.007)
L	1.32(.052)	–
M	–	2.97(.117)

Interface Mating Dimensions

RoHS Compliant

SYM	NAME	DATE	REVISIONS
4			
3			
2			
1			

CVILUX.CORP 2008.03.14 ISSUED

		DATE
DRAWN BY:	Sun	3/13–08'
ENGINEER:	Eisley	3/13–08'
CHECKED BY:	David	3/14–08'
APPROVED BY:	Alex	3/14–08'

UNIT: mm / inch

TOLERANCE UNLESS OTHERWISE SPECIFIED

X.	±0.50/.020	X.° ± 1°
.X	±0.30/.012	.X° ±
.XX	±0.15/.006	.XX° ±

TITLE: SMB SERIES RIGHT ANGLE PCB MOUNT TYPE JACK CONN.

MATERIAL:

FINISH:

瀚荃股份有限公司
CviLux Corporation

DRAWING NO.	CR0203SA	PART NO.	CR02S04225000
SCALE	3 / 1	SHEET 1 OF 1	